1.Place the wall-nounted backboard at a suitable positionon the wall, mark the holes to be installed on the wall andthe backboard with a marker, and then drill holes on thewall with an electric drill.

(Drill to a depth of 60mm using a 6mm diameter drill bit)

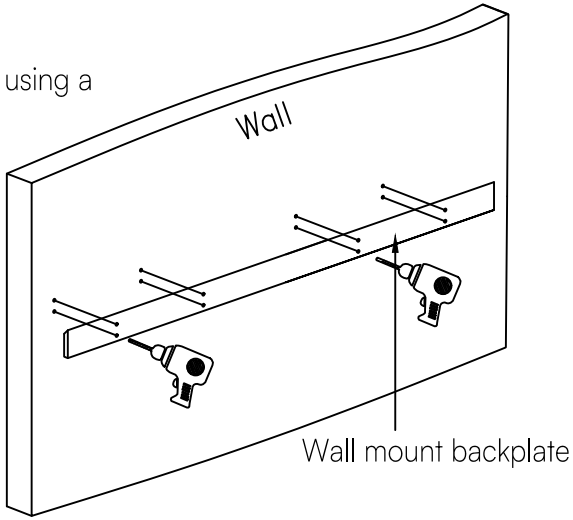

2.After the drilling is completed, insert the expansion pluginto the wall hole, place the wall-mounted backboard, andinsert the self-tapping screw into the position where thewall hole connects to the backboard hole. Tighten the screwswith a screwdriver.

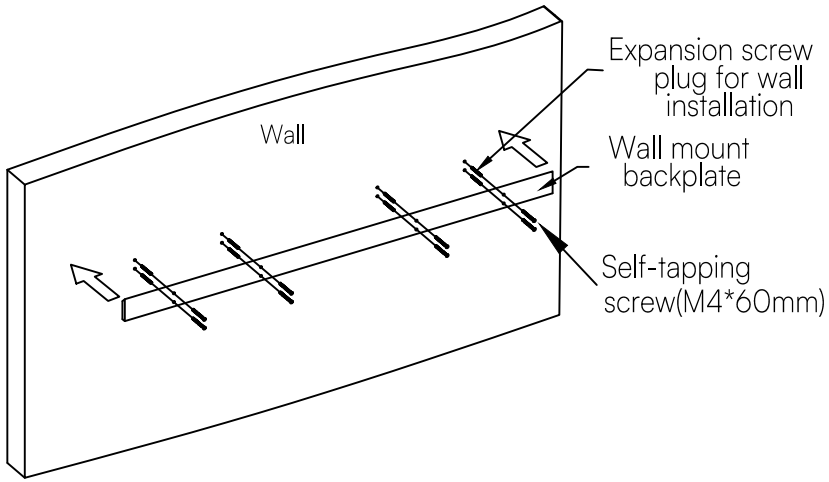

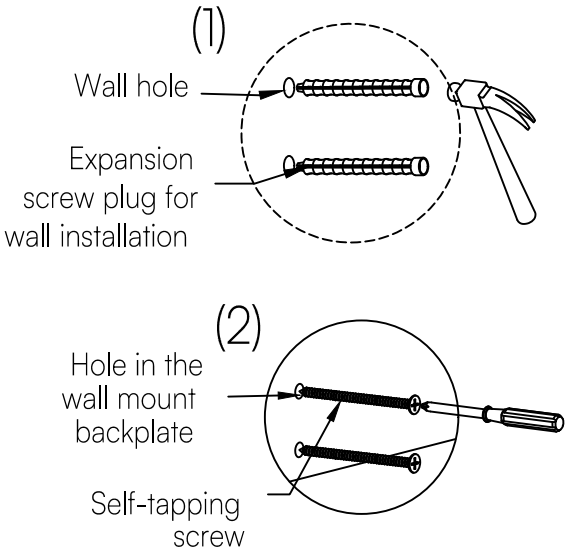

POVISON

Assembly instructions

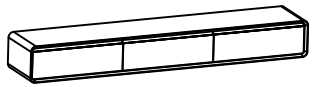

TS2001WC 160 180 200 Installation

The number of people needed for installation: 2

① Please read the manual carefully before installing this product. And strictly follow the installation process

② Please take good care of this manual for your next installation

③ Note: Before installation, screw all the screws to 1/2 of the length of the installation. After all screws are half screwed in, tighten them all together.

Have a question? We're here to help:
https://www.povison.com/help-center/contact
Customer Service Number: +1-669-208-1888
Customer Service Email: supportingcenter@povison.com
Customer Service Hours:EST 10 am - 5.30 pm

Parts list		On a red ribbon are furniture installation accessories		
Serial number	Shape	Name	Quantity equired for installation	Spare quantity
A		Self-tapping screw (M4*60mm)	8	2
B		Expansion screw plugfor wall installation	8	2
C		Self-tapping screw (M4*35mm)	4	2
D		Wrench	1	0
E				
F				
G				

3.Mount the cabinet onto the mounting plate, open the cabinet door, and fasten the cabinet back panel securely to the mounting plate with self-tapping screws.

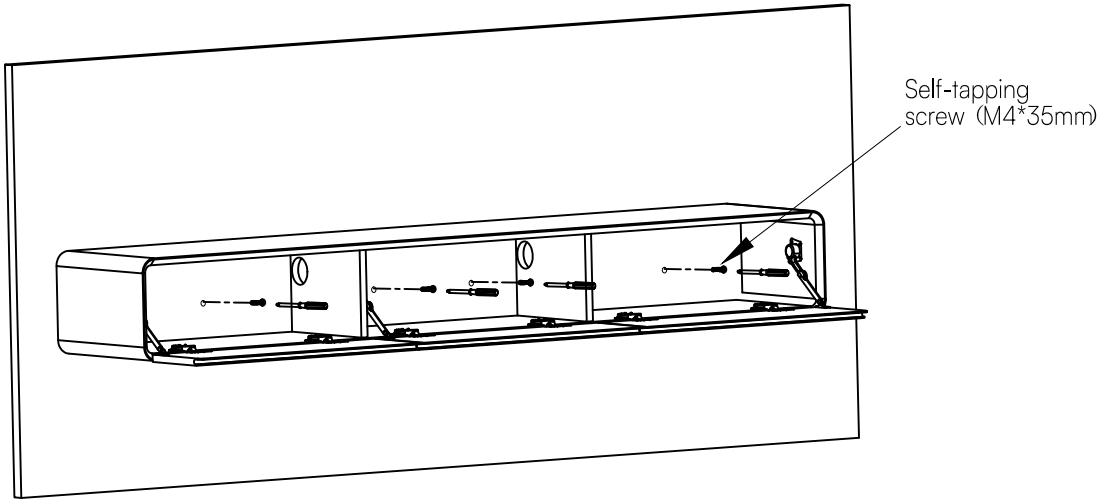

4.Installation complete.

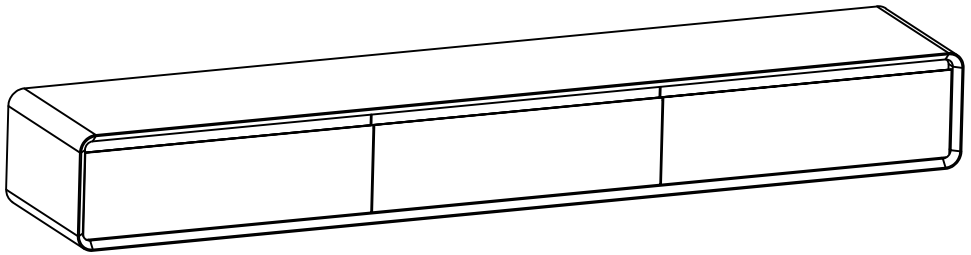

POVISON

Assembly instructions

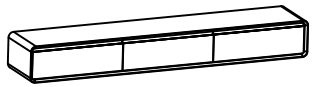

TS2001WC 160 180 200 Installation

The number of people needed for installation: 2

① Please read the manual carefully before installing this product. And strictly follow the installation process

② Please take good care of this manual for your next installation

③ Note: Before installation, screw all the screws to 1/2 of the length of the installation. After all screws are half screwed in, tighten them all together.

Have a question? We're here to help:
https://www.povison.com/help-center/contact
Customer Service Number: +1-669-208-1888
Customer Service Email: supportingcenter@povison.com
Customer Service Hours:EST 10 am - 5.30 pm

Parts list		On a red ribbon are furniture installation accessories		
Serial number	Shape	Name	Quantity equired for installation	Spare quantity
A		Self-tapping screw (M4*60mm)	8	2
B		Expansion screw plugfor wall installation	8	2
C		Self-tapping screw (M4*35mm)	4	2
D		Wrench	1	0
E				
F				
G				