Step 1: Install Sofa Legs.

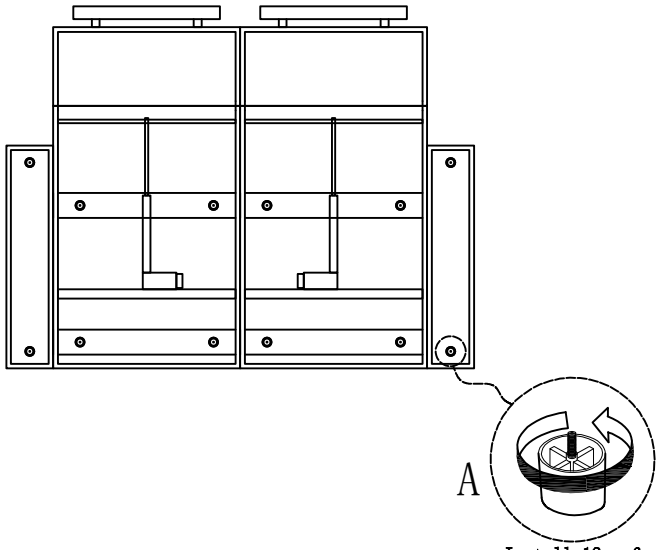

Install 12 sofa legs

Step 2: Assemble the Backrests.

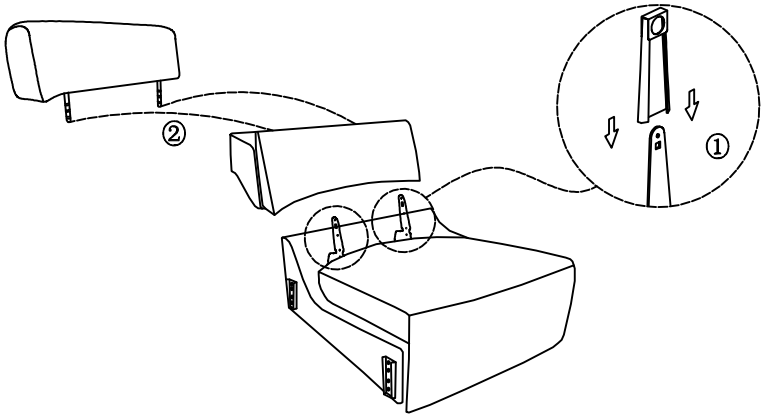

Step 3: Connect the Sofa Modules in Sequence.

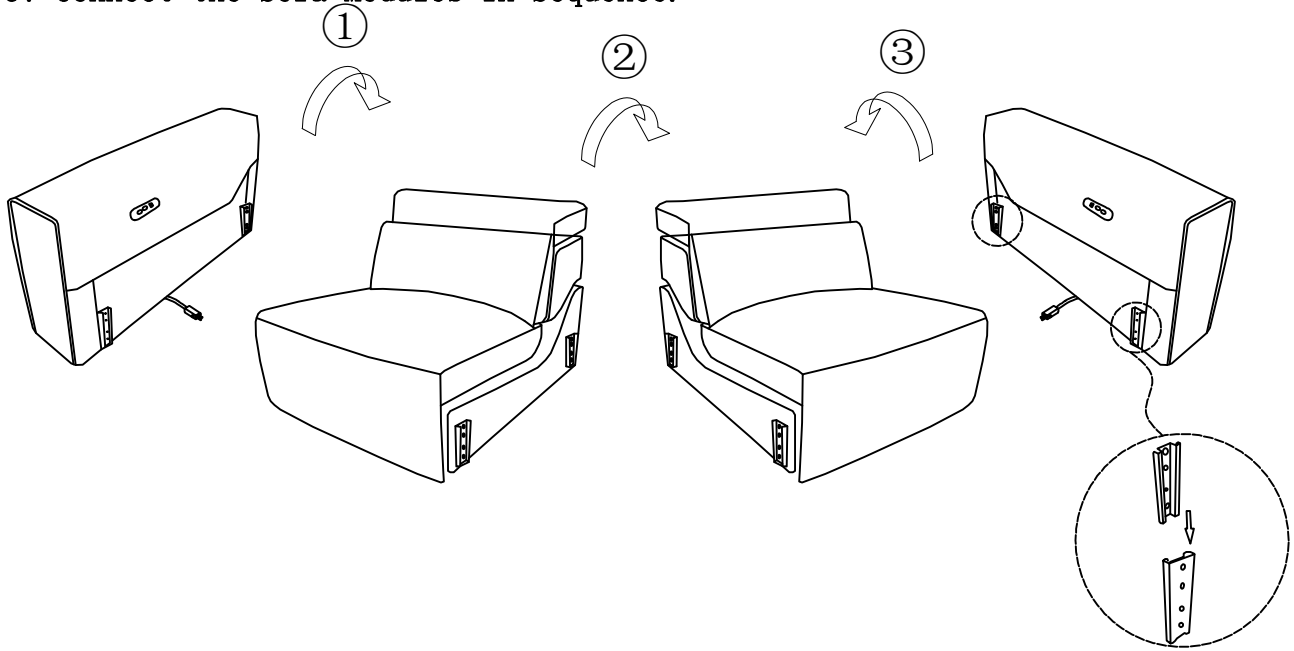

POVISON

Assembly instructions

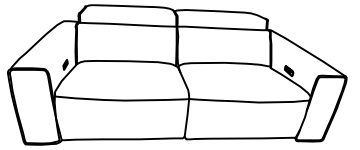

SSF0005-2 Installation

The number of people needed for installation: 2

① Please read the manual carefully before installing this product. And strictly follow the installation process

② Please take good care of this manual for your next installation

③ Note: Before installation, screw all the screws to 1/2 of the length of the installation. After all screws are half screwed in, tighten them all together.

Have a question? We're here to help:
https://www.povison.com/help-center/contact
Customer Service Number: +1-669-208-1888
Customer Service Email:
supportingcenter@povison.com
Customer Service Hours:EST 10 am - 5.30 pm

Parts list — On a red ribbon are furniture installation accessories

Item	Illustration	Name	Qty
A		Sofa Leg	12
B		power cord	1

Step 4: Connect Power Cables as Shown..

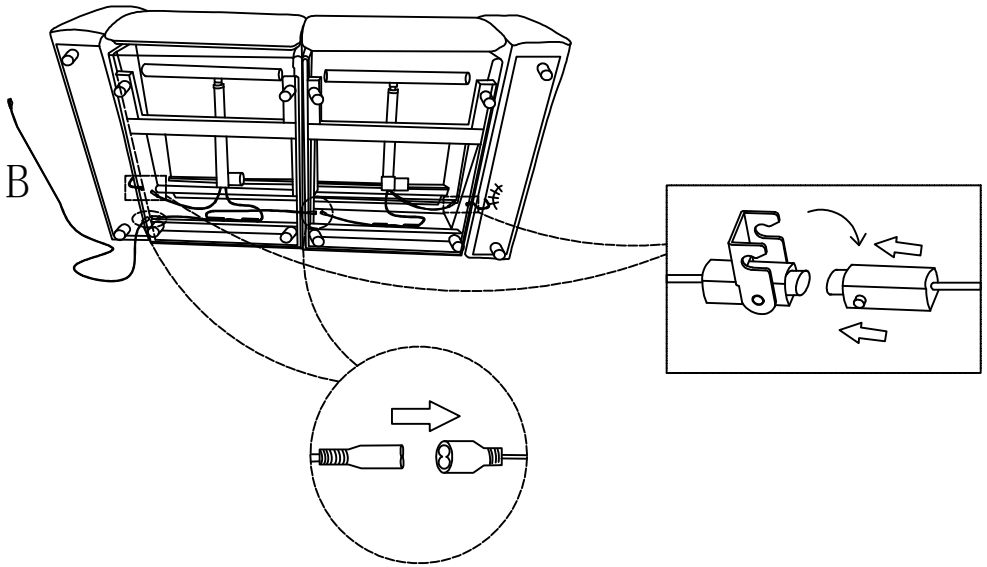

Step 5: Function Demonstration.

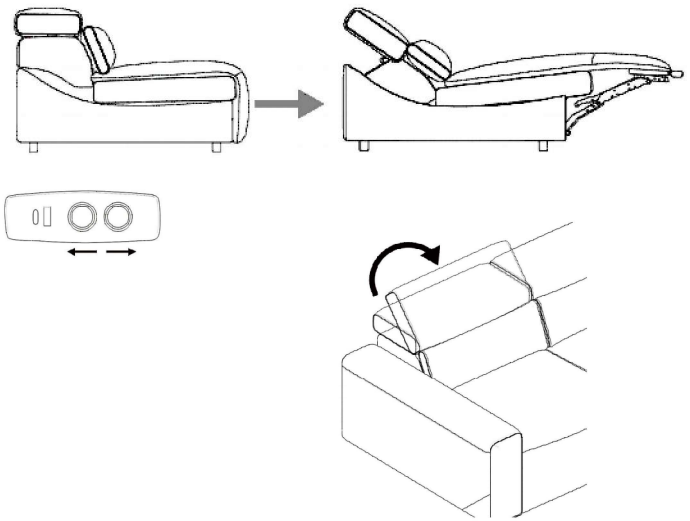

Step 6: Assembly Complete.

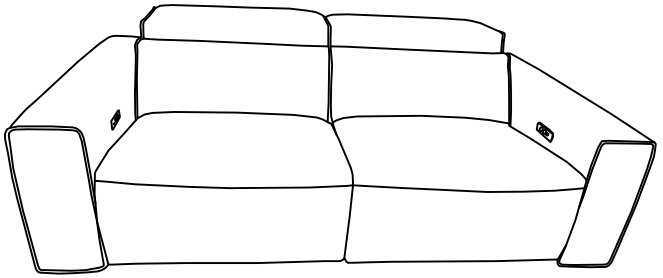

POVISON

Assembly instructions

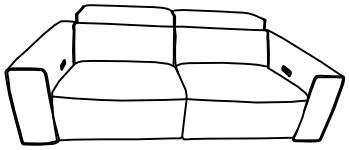

SSF0005-2 Installation

The number of people needed for installation: 2

① Please read the manual carefully before installing this product. And strictly follow the installation process

② Please take good care of this manual for your next installation

③ Note: Before installation, screw all the screws to 1/2 of the length of the installation. After all screws are half screwed in, tighten them all together.

Have a question? We're here to help:
https://www.povison.com/help-center/contact
Customer Service Number: +1-669-208-1888
Customer Service Email:
supportingcenter@povison.com
Customer Service Hours:EST 10 am - 5.30 pm

Parts list — On a red ribbon are furniture installation accessories

Item	Illustration	Name	Qty
A		Sofa Leg	12
B		power cord	1